Industrial Duty Actuator Bracket

Product Data Sheet

Industrial Duty Aluminum Clevis

for the industrial duty LACT series and the 10A/B series actuators

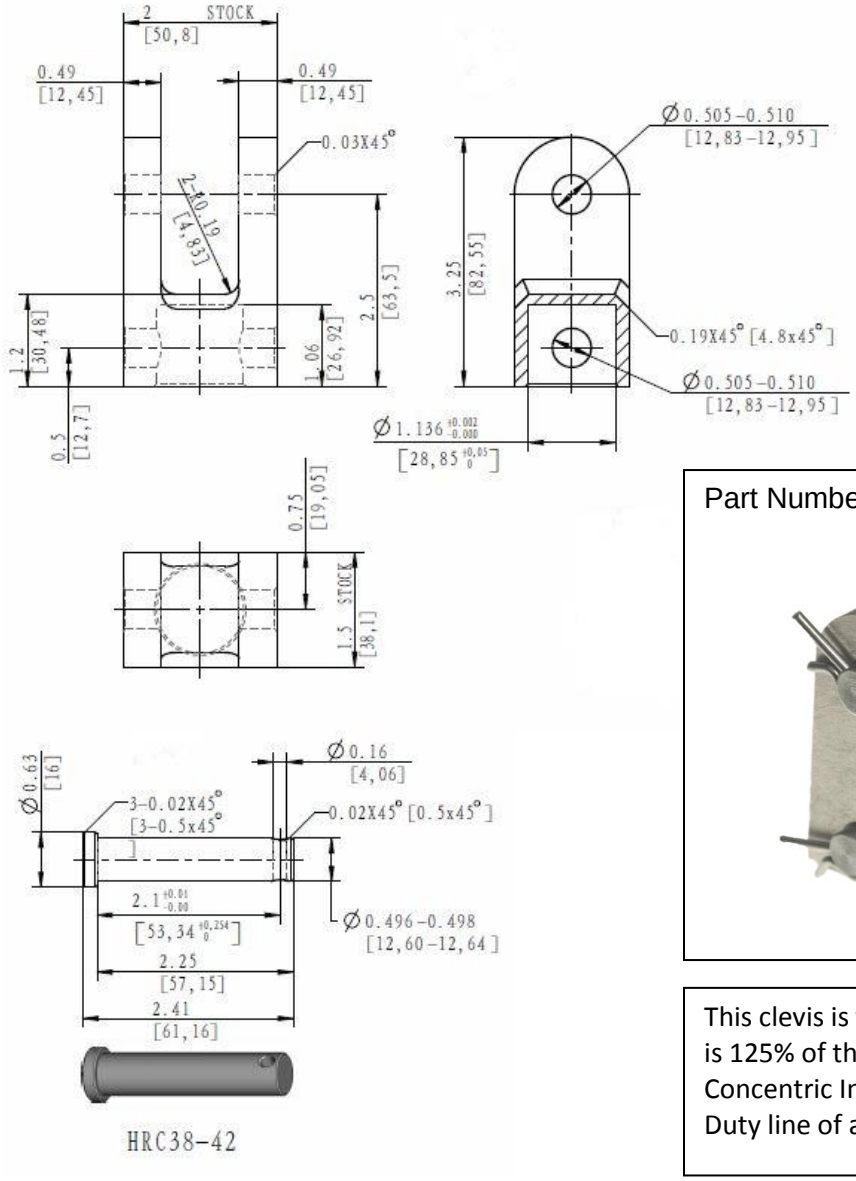

Part Number: LA-ID-CLEVIS

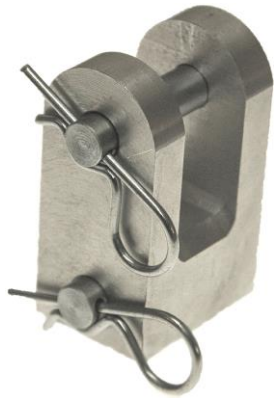

This clevis is tested to 3,821 lbs., which is 125% of the highest static load that Concentric International's Industrial Duty line of actuators are rated for.

Terms of Use

The user is responsible for determining the suitability of Concentric International products for specific applications. Due to continuous development in order to improve its products, Concentric International products are subject to change without prior notice. Concentric International reserves the right to discontinue the sale of any products at any time.

Concentric International
1901 Bell Ave., Suite 18, Des Moines, IA 50315
www.concentricintl.com

Rev. 20170712